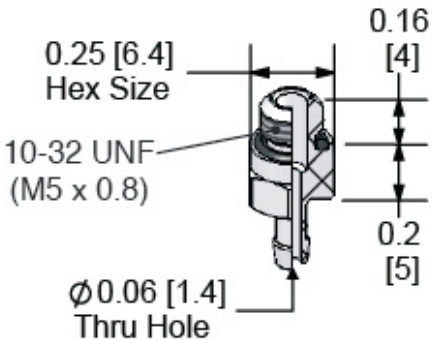

8-10M	
Assembly Suffix:	10M
Weight: oz. (g)	0.08 (2.3)
P.E. Filter:	N/A
S.S. Filter:	N/A

Robo-Tool, Inc.

PART NUMBER

8-10M