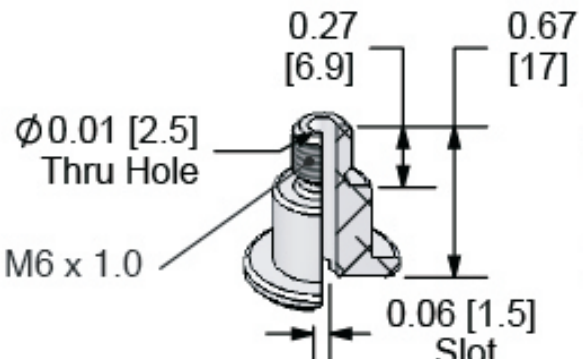

50-6MS	
Assembly Suffix:	6MS
Weight: oz. (g)	0.12 (3.4)
P.E. Filter:	N/A
S.S. Filter:	N/A

Robo-Tool, Inc.

PART NUMBER

50-6MS